Office of the City Manager

INFORMATION CALENDAR
January 21, 2014

To: Honorable Mayor and Members of the City Council

From: Christine Daniel, City Manager

Submitted by: Eric Angstadt, Director, Planning and Development Department

Subject: LPC-NOD: 2210 Shattuck Avenue

INTRODUCTION

The attached Landmarks Preservation Commission (LPC) Notice of Decision (NOD) is submitted to the Mayor and City Council pursuant to Berkeley Municipal Code (BMC) Section 3.24.240, which states that "A copy of the Notice of Decision shall be filed with the City Clerk and the City Clerk shall present said copy to the City Council at its next regular meeting (Ord. 4694-NS § 4.1(c), 1974)."

CURRENT SITUATION AND ITS EFFECTS

The Landmarks Preservation Commission has approved a Structural Alteration Permit for rehabilitation of the City Landmark Shattuck Hotel Building; including two new signs: a non-illuminated wall sign and non-illuminated blade sign.

BACKGROUND

BMC Section 3.24.300 allows the Council to review any action of the Landmarks Preservation Commission in granting or denying a Structural Alteration Permit. In order for the Council to review the decision on its merits, the Council must appeal the Notice of Decision. To do so, a Councilmember must move this Information Item to Action and then move to set the matter for a hearing on its own. Such action must be taken within a minimum of 15 days from the mailing of the Notice of Decision or by January 21, 2014.

If the Council chooses to appeal the action of the Landmarks Preservation Commission, a public hearing will be set within 25 days pursuant to BMC Section 3.24.300.B. The Council must then rule on the application within 30 days from the date that the public hearing is opened or the decision of the Landmarks Preservation Commission is automatically deemed affirmed.

Unless the Council wishes to review the determination of the Landmarks Preservation Commission and make its own decision, the attached Notice of Decision is deemed received and filed.

POSSIBLE FUTURE ACTION
The Council could choose to appeal the decision by the Landmarks Preservation Commission, setting a public hearing at a later date.

FISCAL IMPACTS OF POSSIBLE FUTURE ACTION
Additional staff time would be required to prepare the necessary Council report and resolution.

CONTACT PERSON
Eric Angstadt, Director of Planning and Development, (510) 981-7401
Sally Zarnowitz, Secretary to the Landmarks Preservation Commission, (510) 981-7429

Attachments:
1. 2210 Shattuck Ave– Landmarks Preservation Commission Notice of Decision for Structural Alteration Permit Application (LM No. 13-40000005)

LANDMARKS PRESERVATION COMMISSION

NOTICE OF DECISION

DATE OF BOARD DECISION: November 7, 2013
DATE NOTICE MAILED: January 6, 2014
APPEAL PERIOD EXPIRATION: January 21, 2014
EFFECTIVE DATE OF PERMIT (Barring Appeal or Certification): January 22, 2014[1]

2210 Shattuck Avenue

Structural Alteration Permit LM #13-40000005 for new signage on the ground floor retail space within two structural bays on the exterior of a designated City of Berkeley Landmark, the Shattuck Hotel.

The Landmarks Preservation Commission of the City of Berkeley, after conducting a public hearing, **APPROVED** the following permit:

PERMITS REQUIRED:

- Structural Alteration Permit to allow exterior alterations to structures on a Landmark Building under BMC Section 3.24.240B.1

APPLICANT: Black Coffee Sign Fabrications–9471 Richmond Place, Rancho Cucamonga, CA 91730

ZONING DISTRICT: C-DMU, Downtown Mixed-Use District

ENVIRONMENTAL REVIEW STATUS: Categorically exempt pursuant to Section 15331 of the CEQA Guidelines (Historical Resource Restoration/Rehabilitation).

The Application materials for this project are available online at:
http://www.cityofberkeley.info/zoningapplications

---

1 [1] Pursuant to BMC Section 1.04.070, if the close of the appeal period falls on a weekend or holiday, then the appeal period expires the following business day. Pursuant to BMC Section 3.24.190, the City Council may "certify" any decision of the LPC for review, within fifteen days from the mailing of the NOD. Such certification shall stay all proceedings in the same manner as the filing of a notice of appeal.

FINDINGS, CONDITIONS AND APPROVED PLANS ARE ATTACHED TO THIS NOTICE

BOARD VOTE: 7-0-0-2

YES: OLSON, SCHWARTZ, PARSONS, LINVILL, WAGLEY, HALL, RUEGG

NO:

ABSTAIN:

ABSENT: NG, PIETRAS

TO APPEAL THIS DECISION (see Section 3.24.300 of the Berkeley Municipal Code):

To appeal a decision of the Landmarks Preservation Commission to the City Council you must:

1. Submit a letter clearly and concisely setting forth the grounds for the appeal to the City Clerk, located at 2180 Milvia Street, 1st Floor, Berkeley; or by facsimile to (510) 981-6901. The City Clerk's telephone number is (510) 981-6900.
2. The appeal must be received prior to 5:00 p.m. on the "APPEAL PERIOD EXPIRATION" date shown above (if the close of the appeal period falls on a weekend or holiday, then the appeal period expires the following business day).
3. Submit the required fee (checks and money orders must be payable to 'City of Berkeley'):
   a. The basic fee for persons other than the applicant is $500. This fee may be reduced to $100 if the appeal is signed by persons who lease or own at least 50 percent of the parcels or dwelling units within 300 feet of the project site, or at least 25 such persons (not including dependent children), whichever is less.
   b. The fee for appeals of affordable housing projects (defined as projects which provide 50 percent or more affordable units for households earning 80% or less of Area Median Income) is $500, which may not be reduced.
   c. The fee for all appeals by Applicants is $2500.

STRUCTURAL ALTERATION PERMIT ISSUANCE:

If no appeal is received, the Structural Alteration permit will be issued on the first business day following expiration of the appeal period, and the project may proceed at that time. Information about the Building Permit process can be found at the following link: http://www.ci.berkeley.ca.us/permitservicecenter/.

NOTICE CONCERNING YOUR LEGAL RIGHTS:

If you object to this decision, the following requirements and restrictions apply:

1. If you challenge this decision in court, you may be limited to raising only those issues you or someone else raised at the public hearing described in this notice, or in written correspondence delivered to the Landmarks Preservation Commission at, or prior to, the public hearing.
2. You must appeal to the City Council within fifteen (15) days after the Notice of Decision of the action of the Landmarks Preservation Commission is mailed. It is your obligation to notify the Land Use Planning Division in writing of your desire to receive a Notice of Decision when it is completed.
3. Pursuant to Code of Civil Procedure Section 1094.6(b) and Government Code Section 65009(c)(1), no lawsuit challenging a City Council decision, as defined by Code of Civil Procedure Section 1094.6(e), regarding a use permit, variance or other permit may be filed more than ninety (90) days after the date the decision becomes final, as defined in Code of Civil Procedure Section 1094.6(b). Any lawsuit not filed within that ninety (90) day period will be barred.
4. Pursuant to Government Code Section 66020(d)(1), notice is hereby given to the applicant that the 90-day protest period for any fees, dedications, reservations, or other exactions included in any permit approval begins upon final action by the City, and that any challenge must be filed within this 90-day period.
5. If you believe that this decision or any condition attached to it denies you any reasonable economic use of the subject property, was not sufficiently related to a legitimate public purpose, was not sufficiently proportional to any impact of the project, or for any other reason constitutes a "taking" of property for public use without just compensation under the California or United States Constitutions, your appeal of this decision must including the following information:

   A. That this belief is a basis of your appeal.

   B. Why you believe that the decision or condition constitutes a "taking" of property as set forth above.

   C. All evidence and argument in support of your belief that the decision or condition constitutes a "taking" as set forth above.

   If you do not do so, you will waive any legal right to claim that your property has been taken, both before the City Council and in court.

PUBLIC COMMENT:

Communications to Berkeley boards, commissions or committees are public record and will become part of the City's electronic records, which are accessible through the City's website. **Please note: e-mail addresses, names, addresses, and other contact information are not required, but if included in any communication to a City board, commission or committee, will become part of the public record.** If you do not want your e-mail address or any other contact information to be made public, you may deliver communications via U.S. Postal Service or in person to the secretary of the relevant board, commission or committee. If you do not want your contact information included in the public record, please do not include that information in your communication. Please contact the secretary to the relevant board, commission or committee for further information.

FURTHER INFORMATION:

Questions about the project should be directed to the project planner, Sally Zarnowitz, at (510) 981-7410 or szarnowitz@cityofberkeley.info. All project application materials, including full-size plans, may be viewed at the Permit Service Center (Zoning counter), 2120 Milvia Street, between 8 a.m. and 4 p.m., Monday through Friday.

ATTACHMENTS:

1. Findings
2. Project Plans, Received **OCTOBER 30, 2013**

ATTEST:

Sally Zarnowitz, Secretary
Landmarks Preservation Commission

cc: City Clerk
LPC Members
Applicant:
Black Coffee Sign Fabrications
9471 Richmond Place
Rancho Cucamonga, CA 91730

Property Owner:
HSR Berkeley Investments
11100 Santa Monica Blvd., #800
Los Angeles, CA 90029

ATTACHMENT 1

FINDINGS AND CONDITIONS

2210 Shattuck Avenue

Structural Alteration Permit LM #13-40000005

For new signage on the ground floor retail space within two structural bays on the exterior of a designated City of Berkeley Landmark, the Shattuck Hotel

CEQA FINDINGS

1. The project is categorically exempt from the provisions of the California Environmental Quality Act (CEQA, Public Resources Code §21000, et seq. and California Code of Regulations, §15000, et seq.) pursuant to Section 15331 of the CEQA Guidelines ("Historical Resource Restoration/Rehabilitation").

SECRETARY OF THE INTERIOR'S STANDARDS FINDINGS

Regarding the Secretary of the Interior's Standards for Rehabilitation, the Landmarks Preservation Commission of the City of Berkeley makes the following findings:

1. The property's historical use, commercial, has not changed.

2. The historic character of the property will be retained and preserved. No distinctive materials will be removed, and the characteristic features, spaces, and spatial relationships associated with the Mediterranean revival style of the building will be preserved. The required alterations to the storefront to anchor the signage are minimal.

3. The signage is contemporary and will not lead to any changes that will create a false sense of historical development.

4. The project will not affect any changes to the property that have acquired historic significance in their own right.

5. The required alterations to the building to accommodate the proposed signage are minimal and will not affect any distinctive materials, features, finishes, and construction techniques or examples of craftsmanship that characterize the property. The contemporary signage will cover minimal amount of the buildings transom. Anchors in the historical façade will be as discreet as possible and patched when signage is removed.

6. No work to the building's historic features will be undertaken.

7. Chemical or physical treatments are not proposed, however, standard conditions would require any chemical or physical treatments to be undertaken using the gentlest means possible.

8. The project does not have the potential to affect known subsurface archaeological resources.

9. The required alterations to the building to accommodate the signage are minimal. The new work will be differentiated from the old through its use of colors and materials and, by conforming to the Downtown Design Guidelines, would be compatible with the historic materials, features, size, scale and proportion, and massing to protect the integrity of the property and its environment.

10. The historic property will be unimpaired. As conditioned, the required alterations to the building to accommodate the signage will be undertaken in such a manner that, if removed in the future, the essential form and integrity of the historic property and its environment would be unimpaired.

FINDINGS FOR APPROVAL

1. As required by Section 3.24.260 of the Landmarks Preservation Ordinance, the proposed work is as appropriate for and as consistent with the purposes of the Ordinance as is possible within the peculiar circumstances of the owner of the property and preservation or enhancement of the characteristics and particular features specified in the designation.

   The project is limited to the installation of signage on a City-designated landmark. Because the project is consistent with the Downtown Design Guidelines and the Standards, the proposed signs and as conditioned would not adversely affect the exterior architectural features of the landmark, nor the special character or special historical, architectural or aesthetic interest or value of the landmark and its site.

STANDARD CONDITIONS

The following conditions, as well as all other applicable provisions of the Landmarks Preservation Ordinance, apply to this Permit:

1. Conditions Shall be Printed on Plans

The conditions of this Permit shall be printed on the *second* sheet of each plan set submitted for a building permit pursuant to this Permit, under the title 'Structural Alteration Permit Conditions'. *Additional sheets* may also be used if the *second* sheet is not of sufficient size to list all of the conditions. The sheet(s) containing the conditions shall be of the same size as those sheets containing the construction drawings; 8-1/2" by 11" sheets are not acceptable.

2. Plans and Representations Become Conditions

Except as specified herein, the site plan, floor plans, building elevations and/or any additional information or representations, whether oral or written, indicating the proposed structure or manner of operation submitted with an application or during the approval process are deemed conditions of approval.

3. Subject to All Applicable Laws and Regulations

The approved use and/or construction is subject to, and shall comply with, all applicable City Ordinances and laws and regulations of other governmental agencies. Prior to construction, the applicant shall identify and secure all applicable permits from the Building and Safety Division, Public Works Department and other affected City divisions and departments.

4. Exercise and Lapse of Permits (Section 23B.56.100)

A. A permit for the construction of a building or structure is deemed exercised when a valid City building permit, if required, is issued, and construction has lawfully commenced.

B. A permit may be declared lapsed and of no further force and effect if it is not exercised within one year of its issuance, except that permits for construction or alteration of structures or buildings may not be declared lapsed if the permittee has: (1) applied for a building permit; or, (2) made substantial good faith efforts to obtain a building permit and begin construction, even if a building permit has not been issued and/or construction has not begun.

5. Indemnification Agreement

The applicant shall hold the City of Berkeley and its officers harmless in the event of any legal action related to the granting of this Permit, shall cooperate with the City in defense of such action, and shall indemnify the City for any award of damages or attorneys fees that may result.

ADDITIONAL CONDITIONS

The following additional conditions are attached to this Permit:

6. **Signs:** shall include agreement to patch any anchor holes in the façade upon sign removal. Wall Sign shall be the same dimensions, depth (2-1/8"), and material as Bike Station.

7. **Chemical Treatments.** Any chemical treatments needed as construction progresses will be undertaken using the gentlest means possible.

Sally Zarnowitz, ARCH, LEED AP
Secretary, Landmarks Preservation Commission

Prepared by: Maria Lusherovich

Attachment 2 - NOD - Project Plans
Page 1 of 5

BlackCoffee Sign FABRICATORS

Sprint

The purpose of these submittals is to clarify the information provided to us. It is our intent to manufacture and install the signs in this package without errors. However, it is vitally important for all parties concerned to thoroughly review this submittal and ensure that the information contained within is error free. By approving this submittal package, the signer is declaring that everything in this package is correct - or is to be changed as indicated. BlackCoffee Fabricators (Sign-Wize) will only be held responsible for signs produced as indicated in these approved submittals. BlackCoffee Fabricators (Sign-Wize) has no responsibility for changes not authorized herein.

Permit File

BlackCoffee Sign FABRICATORS
LICENSED
9471 Richmond Pl. Rancho Cucamonga, Ca 91730

Design Number: 12 0091	Date: 09.18.12	Site Location: 2210 Shattuck Ave, Berkeley, Ca, xxx xxx xxxx
Project Name: Sprint		
Client:		Page: 01 Of 05 By: A Castañeda Revised:

Client Approval:
Authorized By: Date:
Authorized By: Date:

NO PORTION OF THIS DOCUMENT MAY BE COPIED, MODIFIED OR SUBMITTED TO OTHER PARTIES WITHOUT AUTHORIZED CONSENT BY BLACKCOFFEE FABRICATORS INC. ALL DESIGNS SHOWN HEREIN ARE THE SOLE PROPERTY OF BLACKCOFFEE FABRICATORS INC. AND ALL RIGHTS ARE RESERVED.

By signing this approval you agree to the size, colors, locations, and materials as specified. Approval of this design implies that it has been reviewed and that no further changes are required. At least one authorized signature and date is required.

SITE PLAN

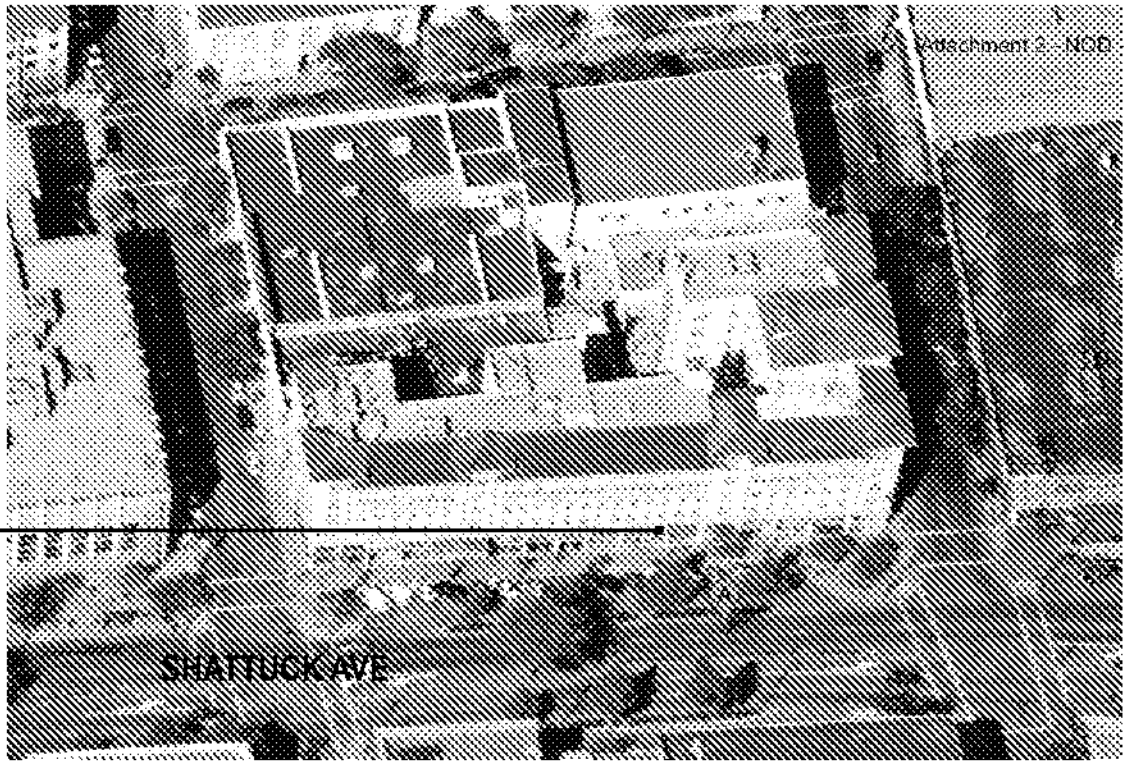

NORTH

BlackCoffee Fabricators
9471 Richmond Pl. Rancho Cucamonga, Ca 91730

Design Number: 12 0091	Date: 09.18.12	Site Location: 2210 Shattuck Ave	Client Approval:
Project Name: Sprint		Berkeley, Ca	Authorized By: Date:
Client:		XXX XXX XXXX	
		Page: 02 Of 05 By: A Castañeda Revised:	Authorized By: Date:

NO PORTION OF THIS DOCUMENT MAY BE COPIED, MODIFIED OR SUBMITTED TO OTHER PARTIES WITHOUT AUTHORIZED CONSENT BY BLACKCOFFEE FABRICATORS INC. ALL DESIGNS SHOWN HEREIN ARE THE SOLE PROPERTY OF BLACKCOFFEE FABRICATORS INC. AND ALL RIGHTS ARE RESERVED.

By signing this approval you agree to the size, color, location, and materials as specified. Approval of this design implies that it has been reviewed and that no further changes are required. At least one authorized signature and date is required.

Attachment 2 - NOD - Project Plans
Page 3 of 5

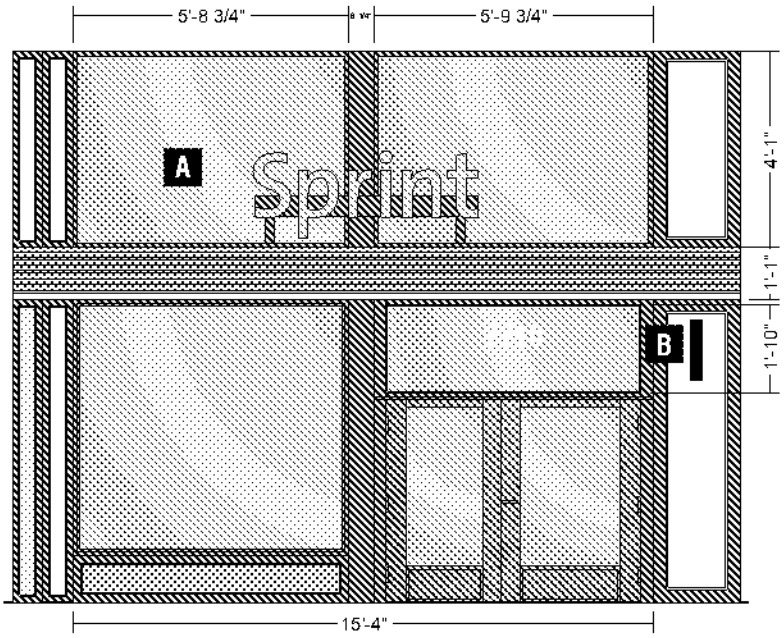

A NON ILLUMINATED CHANNEL LETTERS MOUNTED ON RACEWAY STAND
SCALE: 1/2" = 1"

B NON ILLUMINATED BLADE SIGN W/ LETTERS AND LOGO
SCALE: 1/2" = 1"

BlackCoffee Fabricators
9471 Richmond Pl. Rancho Cucamonga, Ca 91730

Design Number: 12 0091	Date: 09.18.12	Site Location: 2210 Shattuck Ave Berkeley, Ca XXX XXX XXXX	Client Approval:
Project Name: Sprint			Authorized By: Date:
Client:		Page: 03 Of 05 By: A Castañeda Revised:	Authorized By: Date:

NO PORTION OF THIS DOCUMENT MAY BE COPIED, MODIFIED OR SUBMITTED TO OTHER PARTIES WITHOUT AUTHORIZED CONSENT BY BLACKCOFFEE FABRICATORS INC. ALL DESIGNS SHOWN HEREIN ARE THE SOLE PROPERTY OF BLACKCOFFEE FABRICATORS INC. AND ALL RIGHTS ARE RESERVED.

By signing this approval you agree to the size, colors, locations, and materials as specified. Approval of this design implies that it has been reviewed and that no further changes are required. At least one authorized signature and date is required.

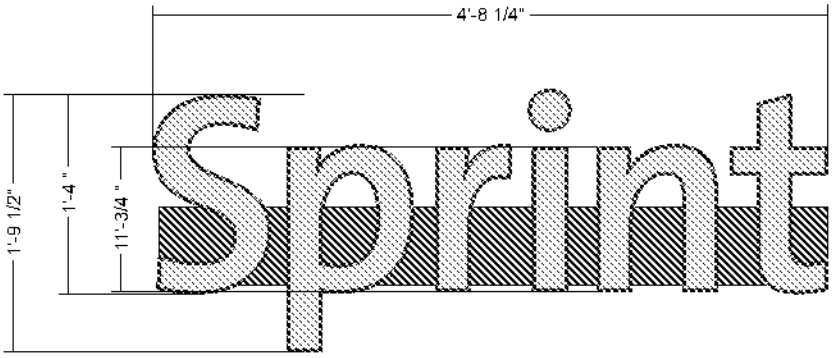

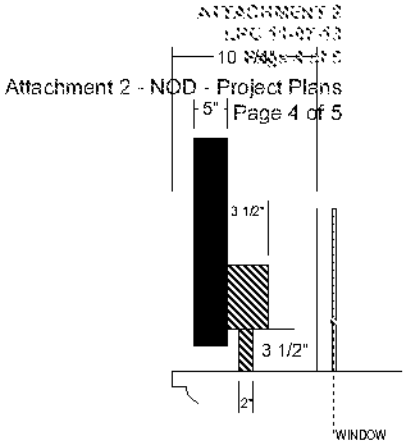

SIDE VIEW

A **FRONT VIEW @ CHANNEL LETTERS & LOGO WITH ALUMINUM FACES**
Scale: 1 1/2"= 1"

BlackCoffee Fabricators
9471 Richmond Pl. Rancho Cucamonga, Ca 91730

Design Number: 12 0091	Date: 09.18.12	Site Location: 2210 Shattuck Ave, Berkeley, Ca, xxx xxx xxxx
Project Name: Sprint		
Client:		Page: 04 Of 05 By: A Castañeda Revised:

Client Approval:
Authorized By: Date:
Authorized By: Date:

NO PORTION OF THIS DOCUMENT MAY BE COPIED, MODIFIED OR SUBMITTED TO OTHER PARTIES WITHOUT AUTHORIZED CONSENT BY BLACKCOFFEE FABRICATORS INC. ALL DESIGNS SHOWN HEREIN ARE THE SOLE PROPERTY OF BLACKCOFFEE FABRICATORS INC. AND ALL RIGHTS ARE RESERVED.

By signing this approval you agree to the size, colors, locations, and materials as specified. Approval of this design implies that it has been reviewed and that no further changes are required. At least one authorized signature and date is required.

Attachment 2 - NOD - Project Plans
Page 5 of 5

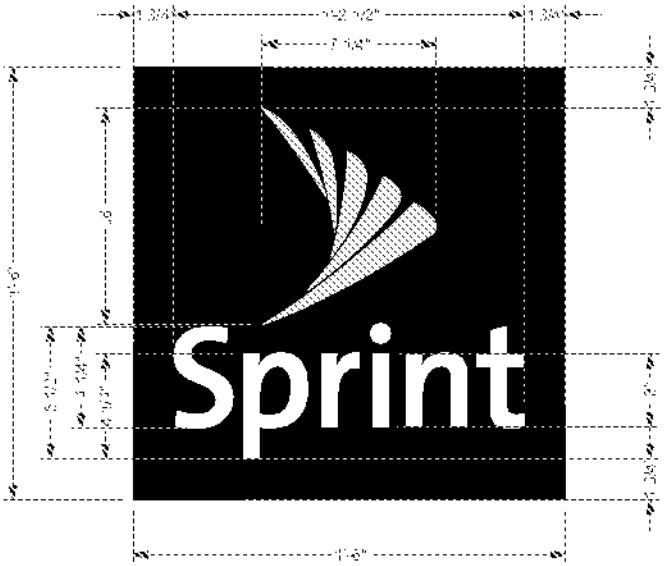

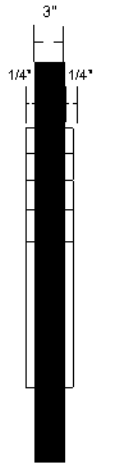

END VIEW

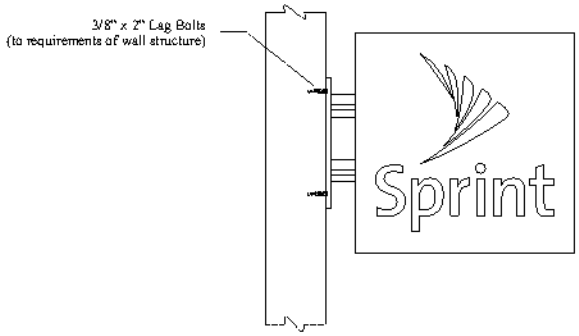

SIDE VIEW

B **BLADE SIGN WITH 1/4" ACRYLIC LETTERS & LOGO**
Scale: 1"=4'

BlackCoffee Fabricators
9471 Richmond Pl. Rancho Cucamonga, Ca 91730

Design Number: 12 0091	Date: 09.18.12	Site Location: 2210 Shattuck Ave Berkeley, Ca xxx xxx xxxx	Client Approval:
Project Name: Sprint			Authorized By: Date:
Client:		Page: 05 Of 05 By: A Castañeda Revised:	Authorized By: Date:

NO PORTION OF THIS DOCUMENT MAY BE COPIED, MODIFIED OR SUBMITTED TO OTHER PARTIES WITHOUT AUTHORIZED CONSENT BY BLACKCOFFEE FABRICATORS INC. ALL DESIGNS SHOWN HEREIN ARE THE SOLE PROPERTY OF BLACKCOFFEE FABRICATORS INC. AND ALL RIGHTS ARE RESERVED.

By signing this approval you agree to the size, colors, location, and materials as specified. Approval of this design implies that it has been reviewed and that no further changes are required. At least one authorized signature and date is required.